NINZ®
FIREDOORS

Hinged gates

NINZ hinged gates
FIRE DOORS

Gates with hollow metal profile frames

FEATURES 2 - 4

ENCUMBRANCES AND APPLICATIONS 5 - 6

MANDATORY - OPTIONAL ACCESSORIES 7 - 9

Gates with angular metal profile frames

FEATURES 10 - 11

ENCUMBRANCES AND APPLICATIONS 12 - 13

MANDATORY - OPTIONAL ACCESSORIES 14 - 17

DOOR-HOLDING SYSTEMS 18 - 19

EXUS® PANIC BARS 20 - 25

All measurements are in mm. We reserve the right to make unannounced technical changes to the contents of this brochure.
Fire rated closures are typically used for internal compartmentalization and have been designed for this purpose.

Features
Hinged gates with hollow metal profile frames

WHAT DEFINES THEM?

The field of use includes large openings and/or special usage conditions in customer-specified dimensions. Gates are supplied with leaves made of flush insulated sheets of metal panes, jointed and attached to each other with screws, "L"-profile hollow metal frames on three sides and finished with a base coat or RAL tints and other accessories as required for proper functioning of the product.

Standards
The gates are certified in accordance with UNI 9723 standards in compliance with the current ministerial provisions in force.

Opening direction, pull
Opening direction needs to be specified while ordering.

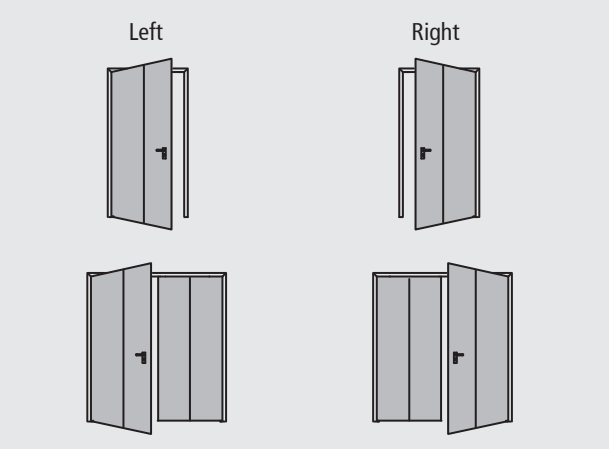

NOTE
Fire rated gates require careful design which reflects their dimensions and special functions. Every installation site should be measured and checked for vertical alignment of the walls and gradients of the flooring. Given the considerable weight of gates, the bearing capacity of the walls should also be checked.

ATTENTION
Gates are supplied as a single pre-assembled unit, which should be kept in mind for purposes of handling. The customer assumes all risks entailed by the use of Hinged gates along escape routes.

Fire compartmentalization elements should always be used properly. They are only designed for installation in spaces and constructions that are vertically aligned and flush.
Compartmentalization for interiors is for areas that are not subject to strong air currents. Installation to be executed by specialized technicians only. For special applications consult with our technical office.

Hinged one-leaved gate with hollow metal profile frame:

REI 120

Hinged two-leaved gate with hollow metal profile frame:

REI 120

Features
Hinged gates with hollow metal profile frames

REI 120 ONE-LEAVED VERSION

This hinged gates series has the following features:

Application
For masonry walls, use plugs inside the span and corner steel outside the span (to be specified while ordering).

Door leaf
Leaf unit made of continuous modules of hollow-core sheet metal panels insulated with appropriate materials, without lower rebate. Leaf thickness 72 mm. Nr. 2 extra-strong hinges for each leaf.

Doorframe
Made of galvanize "L"-shaped hollow metal profiles.

Hinges
Nr. 2 extra-strong hinges.

Sealing
Thermo-expansive, inserted into the leaf rebate.

Door handle
Accident-prevention shape, made of stainless steel with a double lever with return spring and set of plates.
Handle height = 1050 mm.

Lock
CE marked lock with cylinder to pass.

Identification plate
Marking with reference information that is applied to the leaf's rebate.

Finishing
With a base coat thermoset in a 160 degree C furnace, light turquoise pastel color (similar to NCS4020-B50G).

Packaging
Leaf unit on disposable metal container.

Wall opening dimensions
Min. 1000 X 1750 mm, max. 5000 X 2500 mm, larger sizes on request.

Mandatory accessories
1 CE-marked door closer per leaf.

Maximum opening
120° with door closer only, and 110° additional coil spring.

Weight
Gate weight, approx. 60 kg/m² of wall opening.

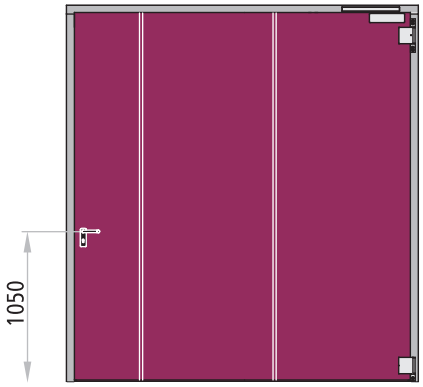

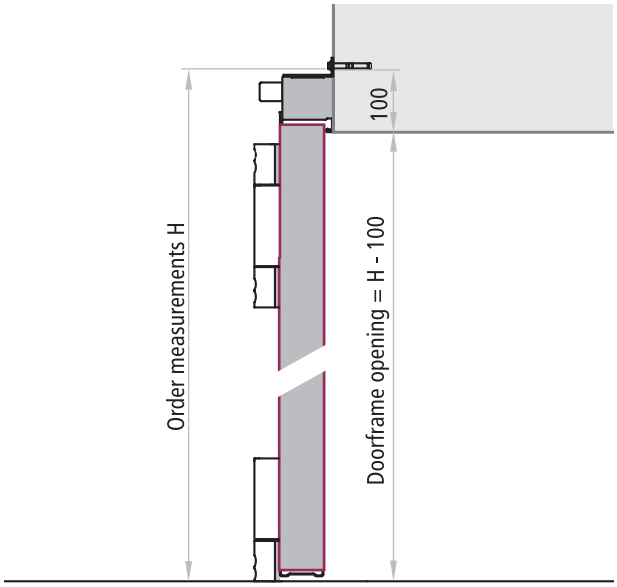

Vertical section for installation with block frame

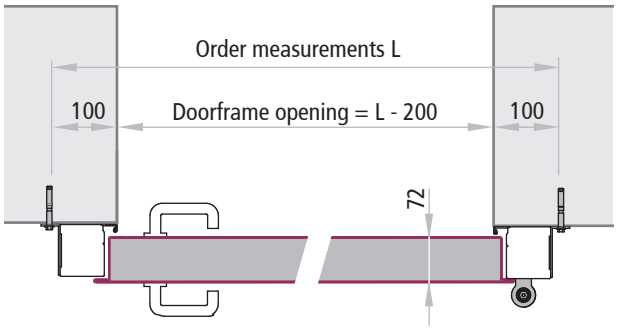

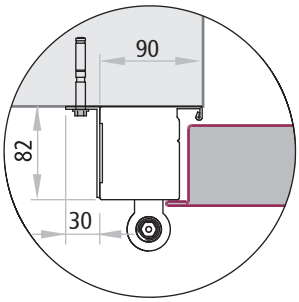

Detail of section for installation with block frame

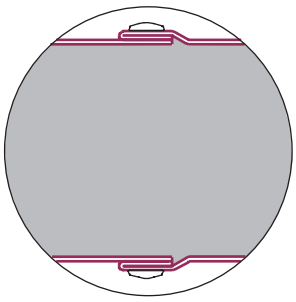

Detail of panel joints

Features
Hinged gates with hollow metal profile frames

REI 120 TWO-LEAVED VERSION

This two-leaved vertically sliding gates series has the following features:

Installation
For masonry walls, use plugs inside the span and corner steel outside the span (to be specified while ordering).

Door leaf
Leaf unit made of continuous modules of hollow-core sheet metal panels insulated with appropriate materials, without lower rebate. Leaf thickness 72 mm. Unequal divisions available on request.

Doorframe
Made of galvanized "L"-shaped hollow metal profiles.

Hinges
Nr. 2 extra-strong hinges for each leaf.

Sealing
Thermo-expansive, inserted into the leaf rebate.

Door handle
Accident-prevention shape, made of stainless steel with a double lever with return spring and set of plates.
Handle height = 1050 mm.

Lock
Active (main) leaf: CE marked lock with cylinder to pass
Secondary leaf: "Flush-bolt" lock for automatic upper and lower blocking of the leaf.

Identification plate
Marking with reference information that is applied to the rebate of one of the leaves.

Finishing
With a base coat thermoset in a 160 degree C furnace color turquoise pastel, light tone (similar to NCS4020-B50G).

Packaging
Leaf unit on disposable metal container.

Wall opening dimensions
Min. 2000 X 1750 mm, max. 5000 X 5000 mm, larger sizes on request.
Minimum division: 1000 mm.

Mandatory accessories
1 door closer per leaf and 1 closing regulator for proper sequencing of leaf closure.

Maximum opening
120° with door closer only, and 110° additional coil spring.

Weight
Gate weight, approx. 60 kg/m² of wall opening.

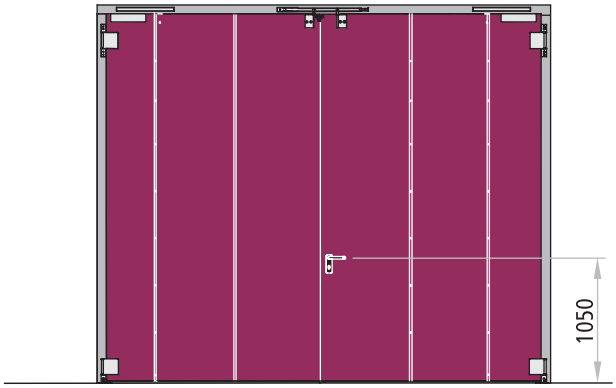

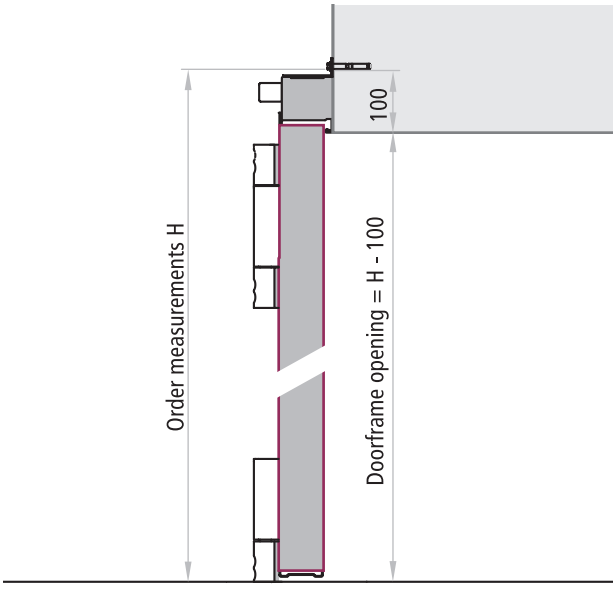

Vertical section for installation with block frame

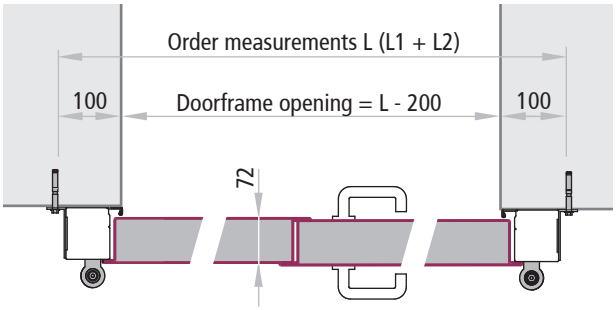

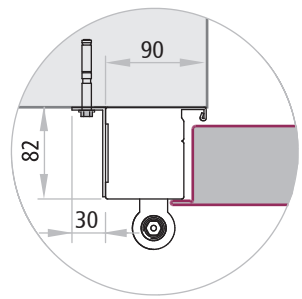

Detail of section for installation with block frame

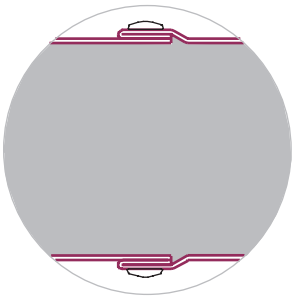

Detail of panel joints

Installations and encumbrances

Hinged one-leaved gate with hollow metal profile frame

ONE-LEAVED INSTALLATION BEYOND THE REVEAL ON BLOCK FRAME

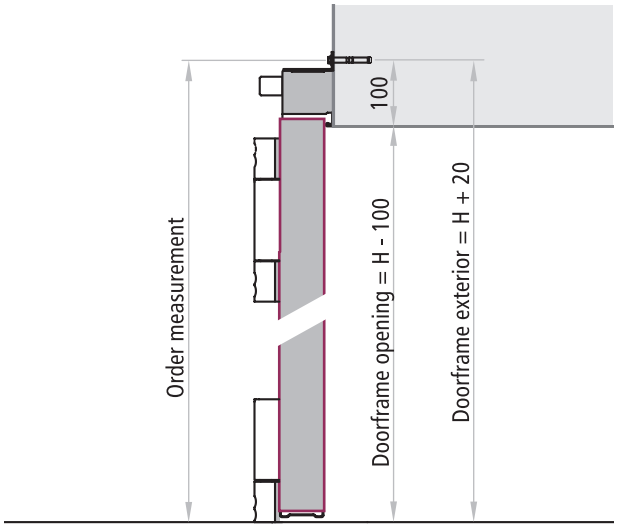

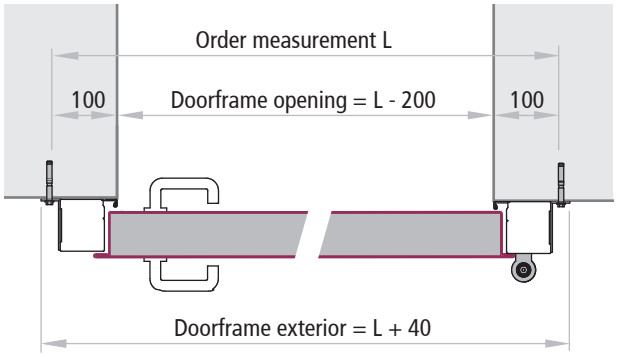

ONE-LEAVED INSTALLATION ON BLOCK FRAME

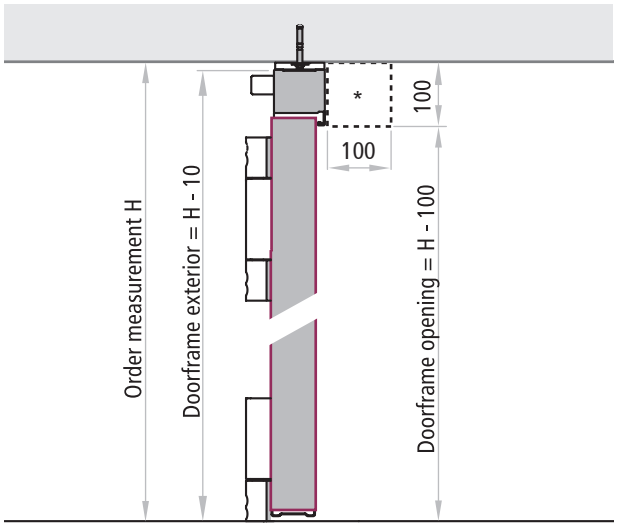

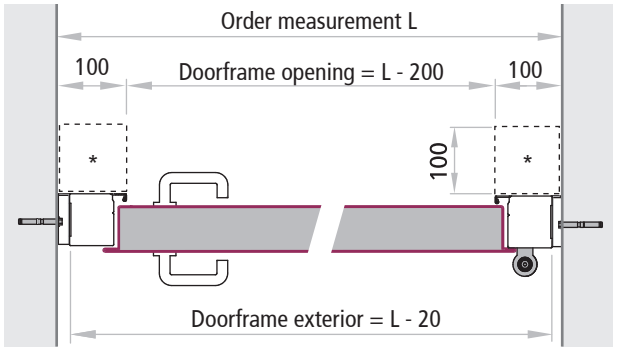

*After the gate has been installed, the building of the additional apron is the buyer's responsibility and duty

ONE-LEAVED DOOR ENCUMBRANCES WITH 90° OPENING

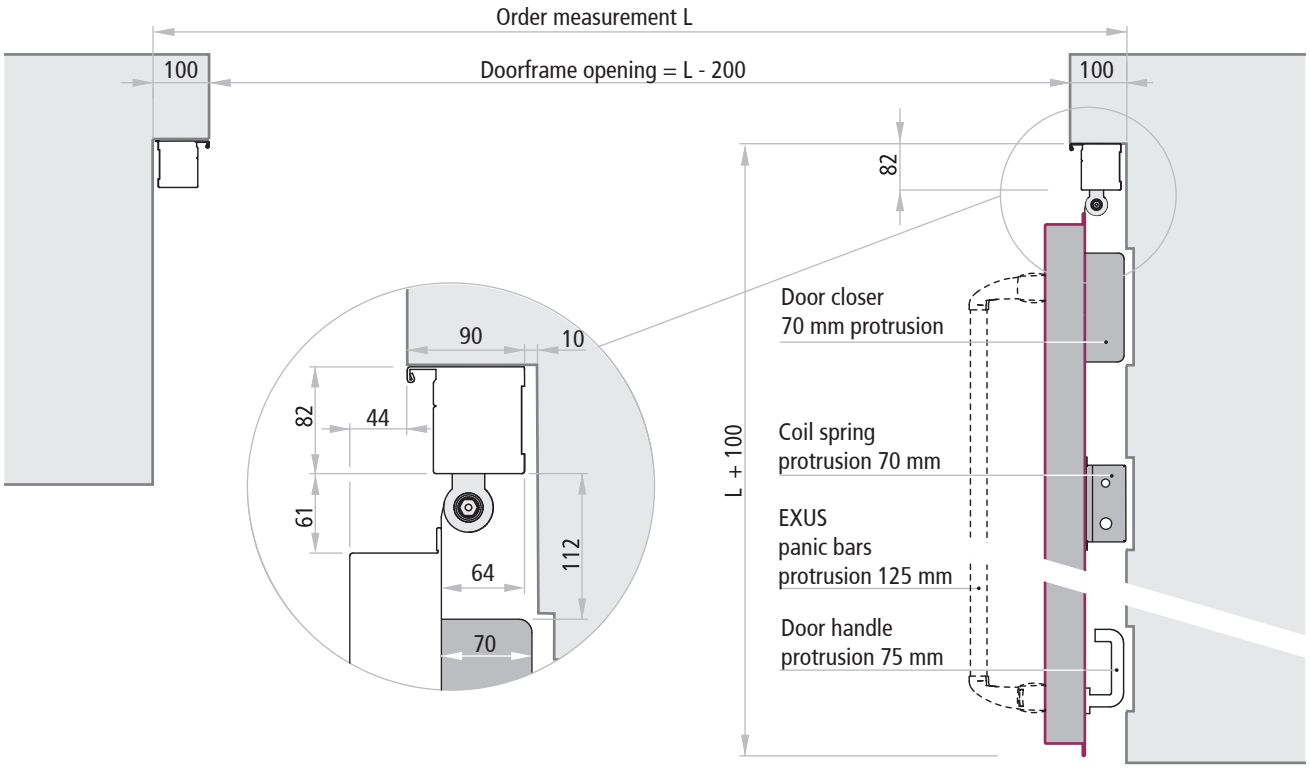

Installations and encumbrances

Hinged two-leaved gates with hollow metal profile frames

TWO-LEAVED INSTALLATION BEYOND THE REVEAL

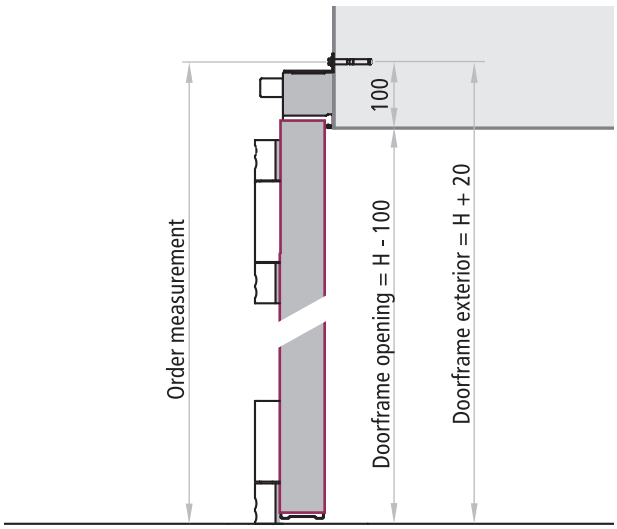

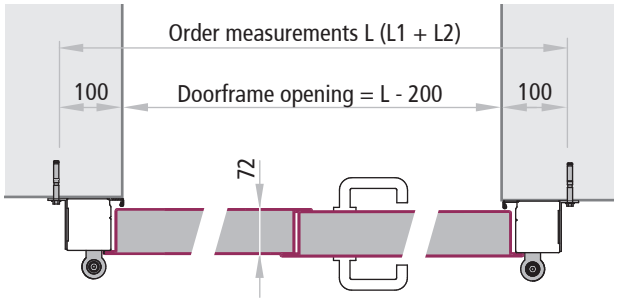

TWO-LEAVED INSTALLATION IN THE REVEAL

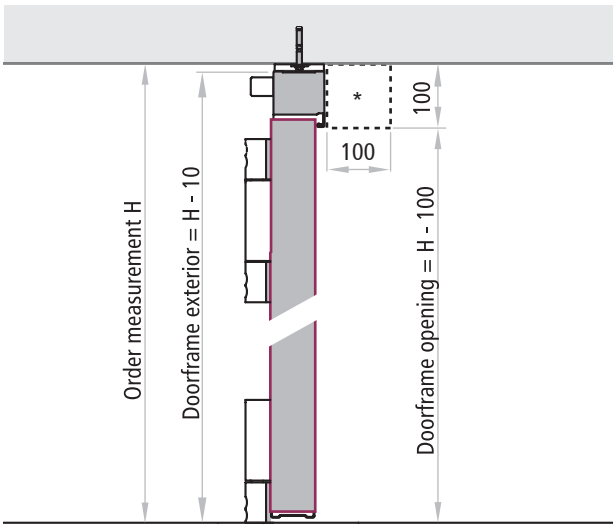

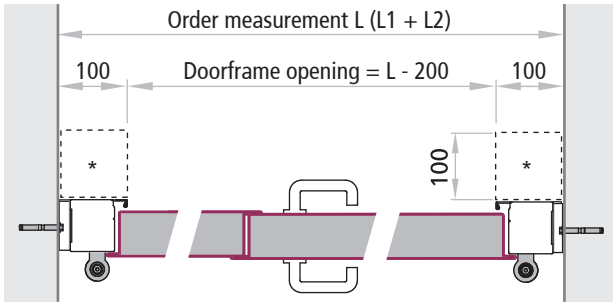

*After the gate has been installed, the building of the additional apron is the buyer's responsibility and duty

TWO-LEAVED DOOR ENCUMBRANCES WITH 90° OPENING

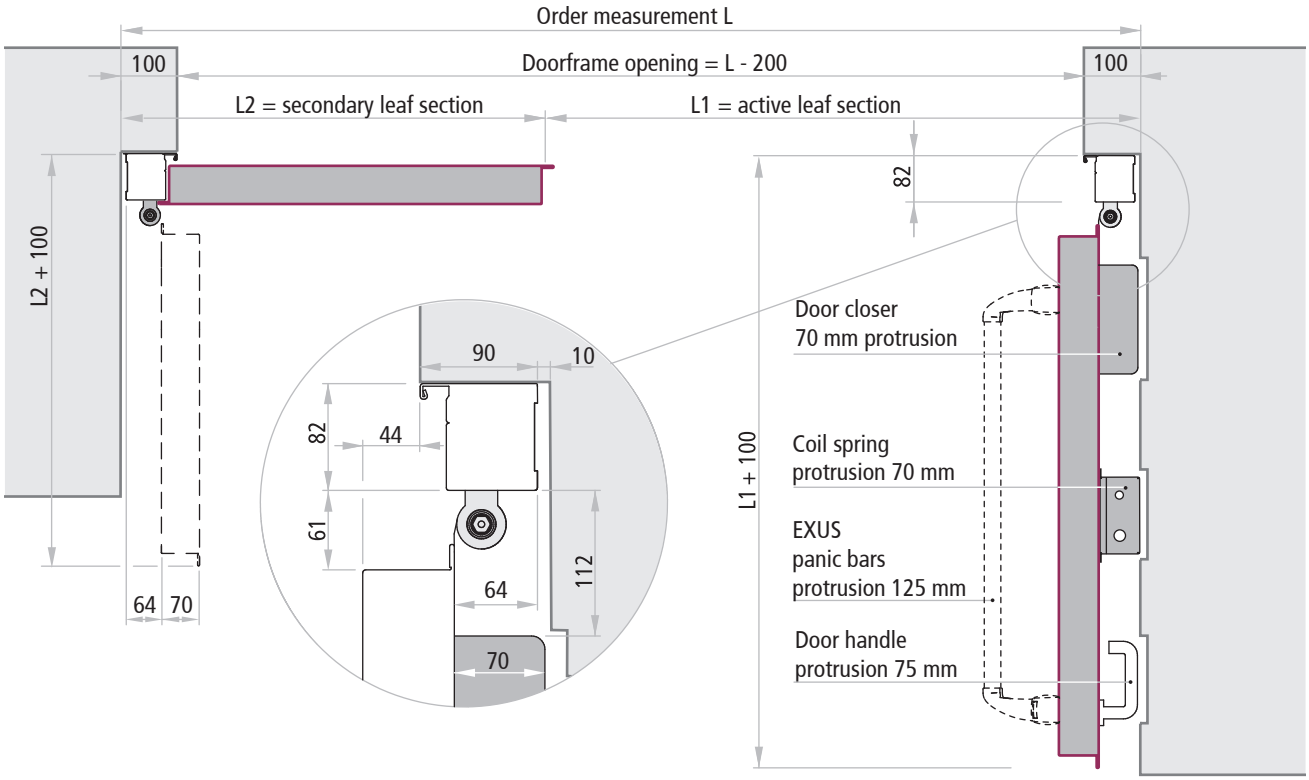

Mandatory accessories
Hinged gates with hollow metal profile frames

TS93 DOOR CLOSER

Door closer (1) with slide channel for large sizes, with regulation of opening force, closing velocity and final closure. Silver color.

EC certification 0432-BPR 0008 EN 1154:1996 + A1:2002

SR390 CLOSING REGULATOR

To ensure automatic closure of two-leaved fire rated gates, a door closing regulation is mandatory. The two-leaved gates door series, therefore, is provided with a Dorma SR 390 closing regulator (2), equipped with feed-in impact absorber and all mechanical functioning, mounted visibly on the doorframe. Silver-colored galvanized finishing, for on-site installation.

EC certification 0432-BPR 0026 EN 1158:1997+A1:2002

COIL SPRING

Coil spring (3) for large sized Leaves to reinforce the door closer, with mechanical functioning and positioned high up on the hinge-side of the leaf (pull-side of the door). The steel tension cable is attached to the cross beam of the doorframe. Finished in the same color as the door leaf (except for replacements).

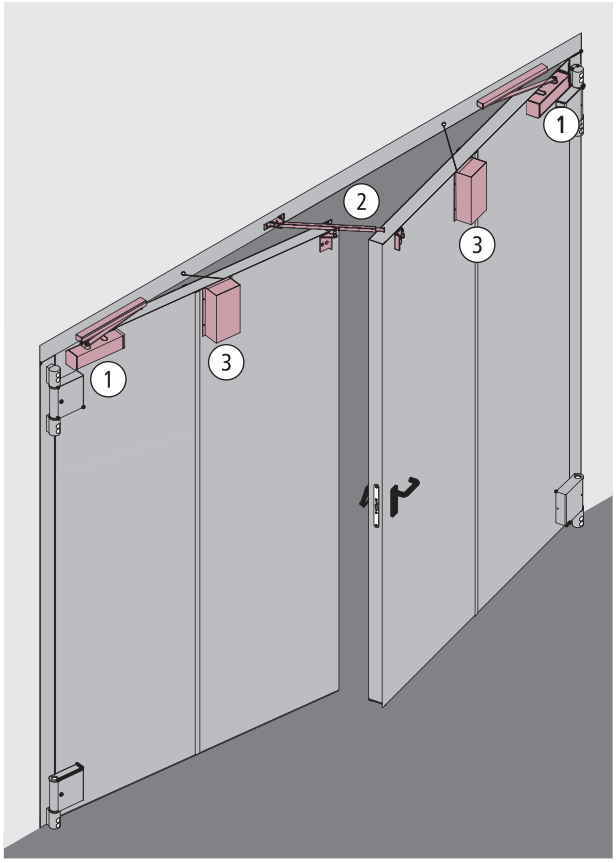

NOTE
The accessories require assembly.

Optional accessories
Hinged gates with hollow metal profile frames

PAINTING

With ecologically formulated anti-corrosive epoxide primer. Minimum resistance to salt fog exposure: 300 hours (A.S.T.M. B - 117 - 61). Basic anti-corrosion coating: Light turquoise pastel. Optional: finishing with satin topcoats from the selection of furnace polymerized RAL colors.

Group 01:

Gate color: light turquoise pastel (similar to NCS4020B50G)

Group 02 (Basic anti-corrosion coating + satin topcoat finishing):

RAL 1001, RAL 1013, RAL 1015, RAL 3000, RAL 3003, RAL 3020, RAL 5010, RAL 5012

RAL 5015, RAL 5024, RAL 6000, RAL 6005, RAL 7001, RAL 7004, RAL 7011, RAL 7016

RAL 7024, RAL 7030, RAL 7032, RAL 7035, RAL 7037, RAL 7038, RAL 7040, RAL 7042

RAL 7047, RAL 8011, RAL 8017, RAL 8019, RAL 9001, RAL 9002, RAL 9005, RAL 9010

RAL 9011, RAL 9016, RAL 9018

Cleaning
Water and neutral soap are recommended for the regular cleaning of our products. Do not use common cleaning products (see detergents) and/or other solvents. We shall not be held responsible for any problems that arise if these guidelines are not respected.

Re-painting
For re-painting, use the following procedure:
- sand and carefully wipe away any dust from the surfaces
- apply a base layer of opaque 2-component epoxide - we recommend EPOX product Nr. 5203 beige 0059 made by ALCEA in Milan
- repaint the surfaces with your choice of lacquers or paints.

Group 03 (Basic anti-corrosion coating + satin topcoat finishing):

RAL 1004, RAL 1005, RAL 1006, RAL 1007, RAL 9006*

*Pre-approval of the sample is required.

Group 04 (Basic anti-corrosion coating + satin topcoat finishing):

RAL 1003, RAL 1012, RAL 1016, RAL 1021, RAL 1023, RAL 5002

In general, all RAL tints are useable except for: RAL 1018, RAL 5005 and RAL 9007

NOTE
Due to artifacts of the printing process, the colors depicted here may not correspond exactly to the colors of actual doors. Please see the RAL or NCS samples.

Retouching
On request, Ninz also provides touch-up paint (nitro/synthetic) in 1,00 kg cans in the necessary RAL tint.

Protection
Since the gates are designed for internal usage, they should always be protected from atmospheric agents and direct sunlight.
Exterior uses require paints that are specially designed for this type of use (on request).

ATTENTION
External installation of gates require various measures for preventing product degradation, such as:
1. The gates should always be protected from bad weather. Permanent damage may result if water seeps inside the door leaf. Provide canopies or roofing to protect newly installed and existing products.
2. Avoid darker colors for gates which will be exposed to direct sunlight. Sheet metal can heat up and cause warping of the door leaf which could compromise the functionality of the door itself.

Optional accessories
Hinged gates with hollow metal profile frames

CC600N AND CC1400 N WALL-MOUNTED ELECTROMAGNETS WITH STRIKE PLATE ANCHORS

For smoke/heat detection systems, central control units and power supply, see the dedicated page in the accessories section of the present brochure.

Technical data for the CC600N electromagnet per leaves up to 5 m² of wall opening with a maximum leaf width of 1700 mm

primary power supply	24 Vcc
voltage tolerance	± 10%
nominal current	125 mA
nominal power	3 W
insertion duration	100%
withstand force	approx. 61 Kg.
operational temperature	0°C ÷ +50°C
operational temperature at 20°C	45°C
magnetic residue	null

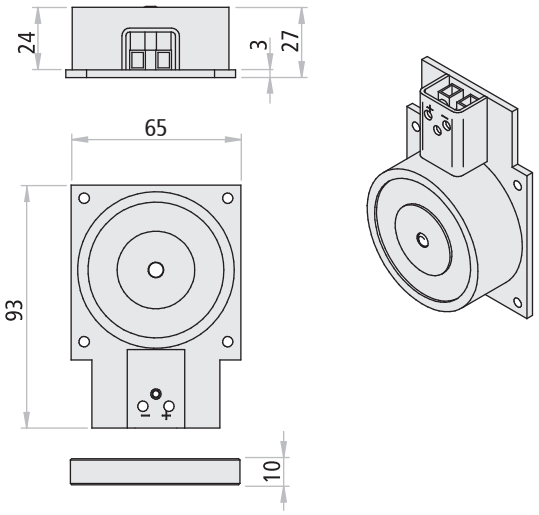

Technical data for the CC1400N electromagnet for leaves up to 5 m² of wall opening or with leaf width greater than 1700 mm

primary power supply	24 Vcc
voltage tolerance	± 10%
nominal current	200 mA
nominal power	5 W
insertion duration	100%
withstand force	approx. 143 Kg.
operational temperature	0°C ÷ +50°C
operational temperature at 20°C	60°C
magnetic residue	null

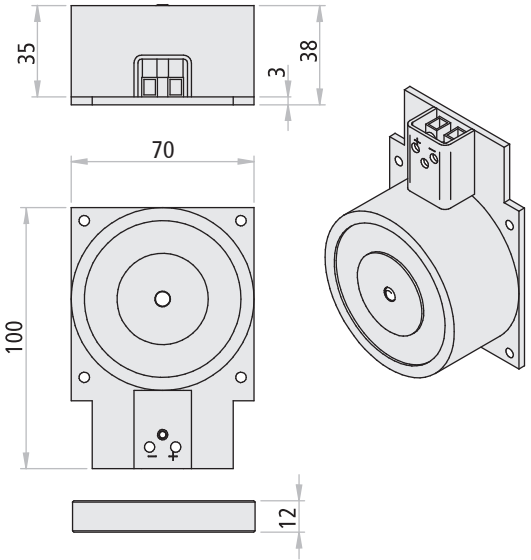

NOTE
Position the anchor 200 mm from the external edge of the leaf and as far as possible from the hinges.
EC marked in conformity with STANDARD EN 1155

EXUS LP/LA/LX PANIC BARS

For more information, please see the "EXUS panic bars" section of the present brochure. Certification: suited for one-leaved gates or the active and secondary leaves of two-leaved gates with dimensions up to 1350 x 2880 mm/leaf and masses of 300 kg/leaf. Height of central bar, 955 mm from the finished floor surface.

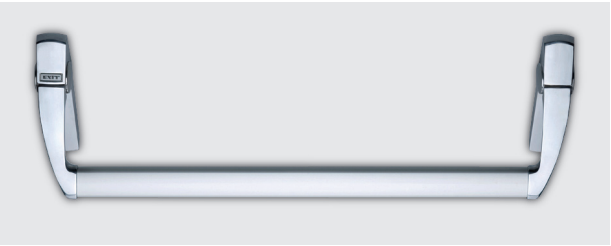

Features
Hinged gates with angular frames

WHAT DEFINES THEM?

The field of use includes large openings and/or special usage conditions in customer-specified dimensions. Gates are supplied with leaves made of flush insulated sheets of metal panes jointed and soldered together, "Z"-profile hollow metal frames on three sides and finished with a base coat or RAL tints and other accessories as required for proper functioning of the product.

Standards
The gates are certified in accordance with UNI 9723 standards in compliance with the current ministerial provisions in force.

Opening direction, pull
Opening direction needs to be specified while ordering.

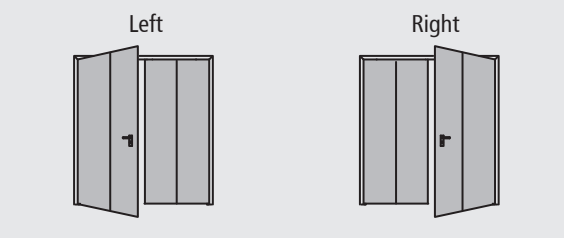

NOTE
Fire rated gates require careful design which reflects their dimensions and special functions. Every installation site should be measured and checked for vertical alignment of the walls and gradients of the flooring. Given the considerable weight of gates, the bearing capacity of the walls should also be checked.

ATTENTION
Gates are supplied as a single pre-assembled unit, which should be kept in mind for purposes of handling. The customer assumes all risks entailed by the use of Hinged gates along escape routes.

Fire compartmentalization elements should always be used properly. They are only designed for installation in spaces and constructions that are vertically aligned and flush.
Compartmentalization for interiors is for areas that are not subject to strong air currents. Installation to be executed by specialized technicians only. For special applications consult with our technical office.

Hinged two-leaved gate with angular frame:

REI 120

Features
Hinged gates with angular frames

REI 120 TWO-LEAVED VERSION

This hinged gates has the following characteristics:

Application
On masonry walls with frame to be cemented or with frame attached to a subframe with plasterboard finishing.

Door leaves
Leaf unit made of continuous modules of hollow-core sheet metal panels insulated with the appropriate materials, without lower rebate. Leaf thickness 73 mm. Unequal divisions available on request.

Doorframe
Made of galvanized sheet metal with a "Z"-shaped profile.

Hinges
Nr. 2 extra-strong drain-type hinges for each leaf.

Sealing
Thermo-expansive, inserted into the leaf rebate.

Door handle
Accident-prevention shape, made of stainless steel with a double lever with return spring and set of plates.
Handle height = 1050 mm.

Lock
Active (main) leaf: CE-marked lock with cylinder to pass
Secondary leaf: "Flush-bolt" lock for automatic upper and lower blocking of the leaf.

Identification plate
Marking with reference information that is applied to the rebate of one of the leaves.

Finishing
With thermoset epoxy-polyester powders, with orange skin anti-scratch finishing, turquoise pastel color - light tone (NCS4020-B50G) for gates maximum H = 4500 mm. Anti-rust coating, light tone turquoise pastel for gates with height H greater than 4500 mm.

Packaging
Leaf unit on disposable metal container.

Dimensions L x H
Min. 2000 X 1750 mm, max. 5000 X 5000 mm, larger sizes on request.
Minimum division: 1000 mm.

Mandatory accessories
1 door closer per leaf and 1 closing regulator for proper sequencing of leaf closure.

Maximum opening
120° with door closer only.

Weight
Gate weight, approx. 60 kg/m² of wall opening.

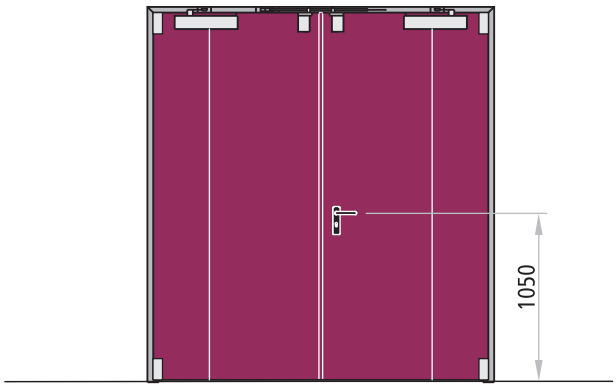

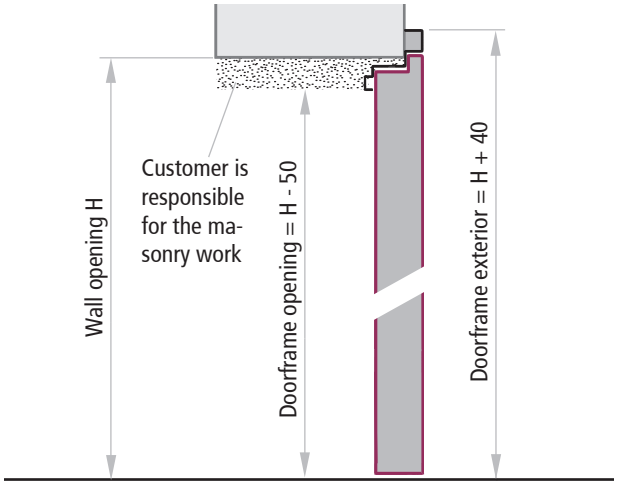

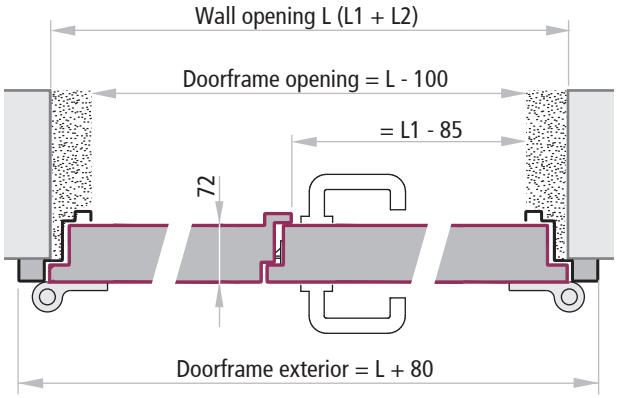

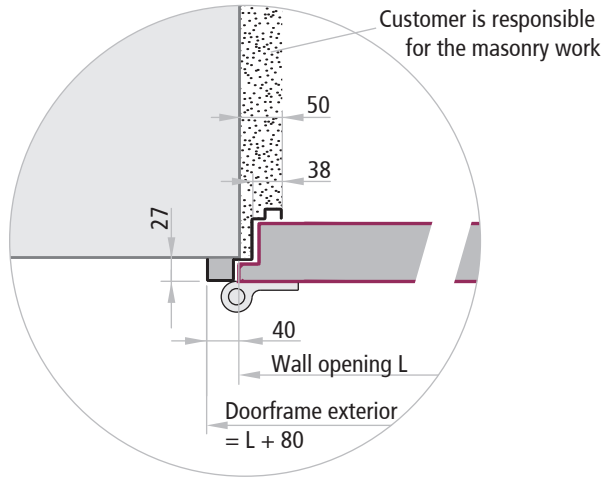

Installation

Hinged two-leaved gates with angular frames

DOORFRAME FOR EMBEDDING IN MASONRY

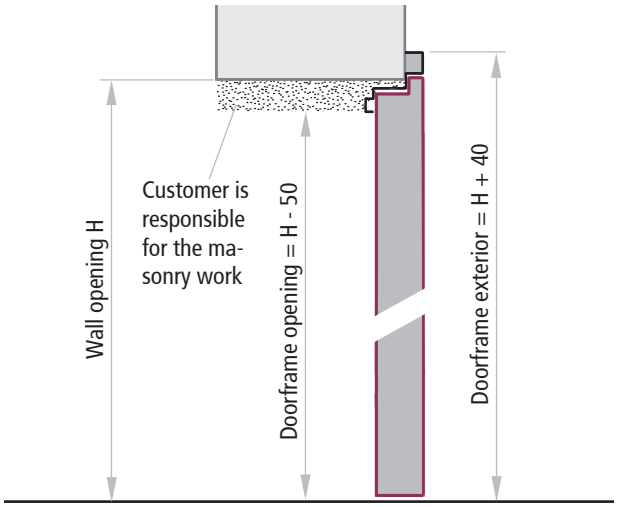

SUBFRAME-MOUNTED DOORFRAME

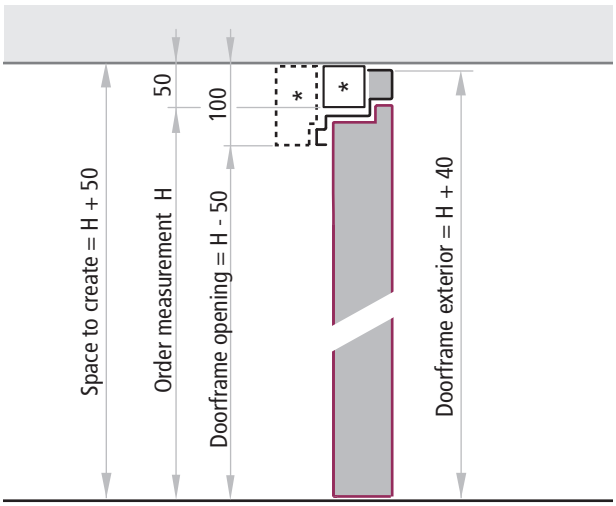

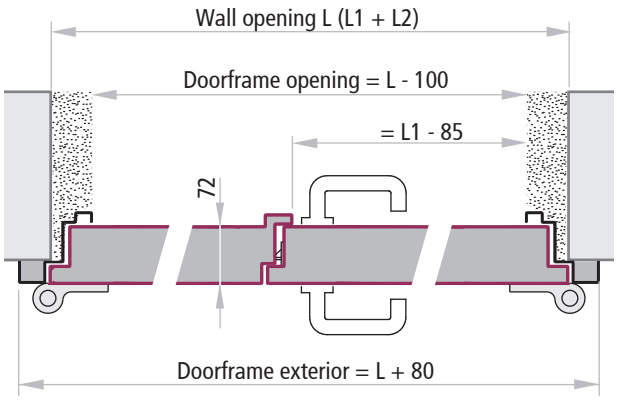

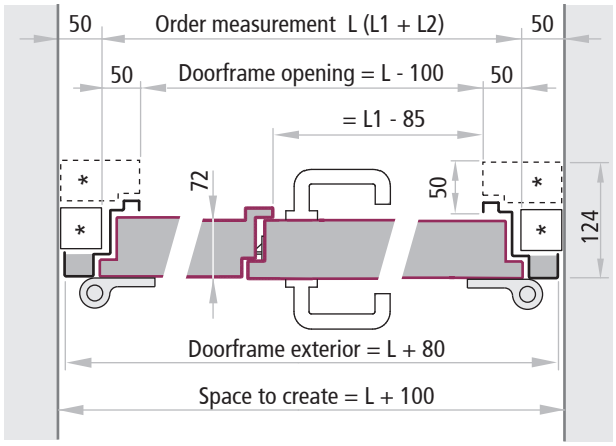

*Subframe 50x50 and plasterboard finishing are the customer's responsibility unless ordered separately.

Encumbrances

Hinged two-leaved gates with angular frames

TWO-LEAVED DOOR ENCUMBRANCES WITH 90° OPENING

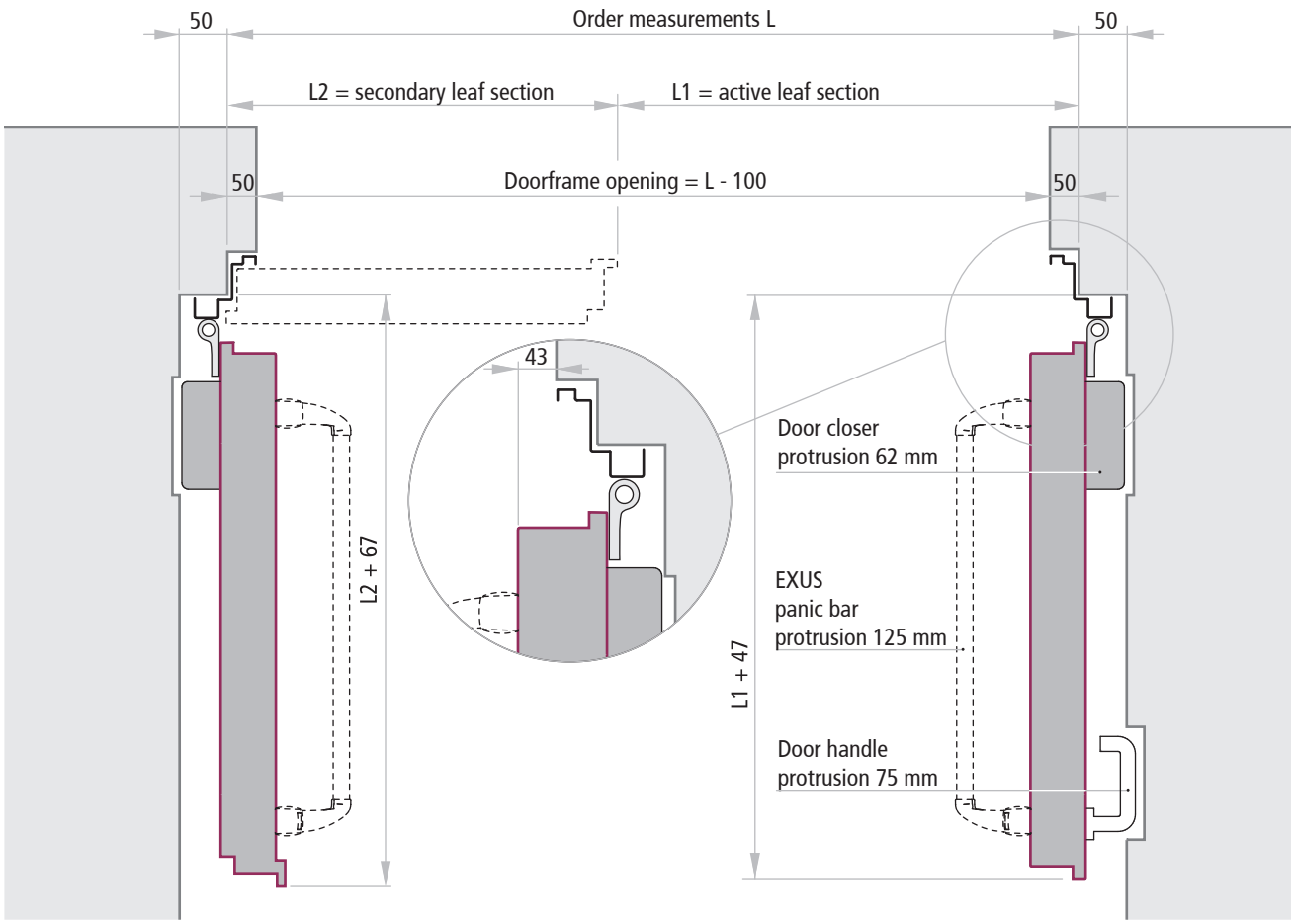

Mandatory accessories

Hinged gates with angular frames

DS-RYOBI 3550 DOOR CLOSER

The DS RYOBI door closer has a 2 to 6 force range that can be adjusted by means of a convenient external tuning screw, is ambidextrous and is available with different accessories and color choices. It comes with an ABS design cover with a standard scissor arm.
It is also available with slide-channel, which requires ordering the D-3550T series door closer.
The D-3550 door closer has two screws for separate regulation of the closing speed and the feed-in speed increase. It is also equipped with a regulator screw for deceleration while opening, to avoid shocks to the door, and a regulator screw for delaying the initiation of the closing cycle.

DS RYOBI D-3550 door closers are guaranteed for 2,000,000 operational cycles, and are certified for use with fire doors BS476 part 22/87 ANSI A 156.4 grade 1 UL and ADA, and as further assurance of their quality they are also CE marked 1720-CPD-0001 Rev A in accordance with EN 1154.

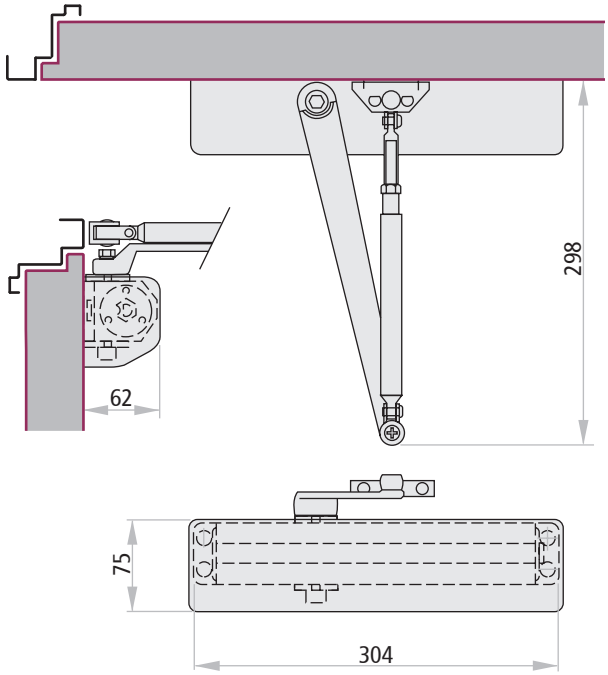

SR90 CLOSING REGULATOR

To ensure automatic closure of two-leaved fire rated gates, a door closing regulators obligatory. The two-leaved fire gates series, therefore, is provided with a Dictator SR90 closing regulator, equipped with feed-in impact absorber and all-mechanical functioning, mounted visibly on the doorframe. Silver-colored galvanized finishing and for on-site installation.

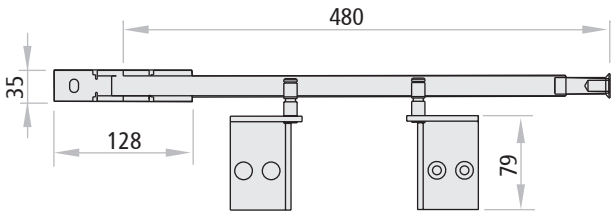

EC Certification 0432-BPR 0109.02 EN 1158:1997/A1:2004/04

VS 2000 SHOCK ABSORBER

For large doors to soften the final shock of door closure, positioned on the hinge-side of the leaf. The strike plate is attached to the doorframe.

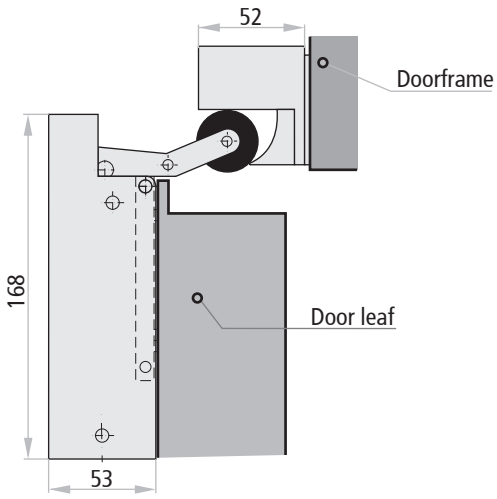

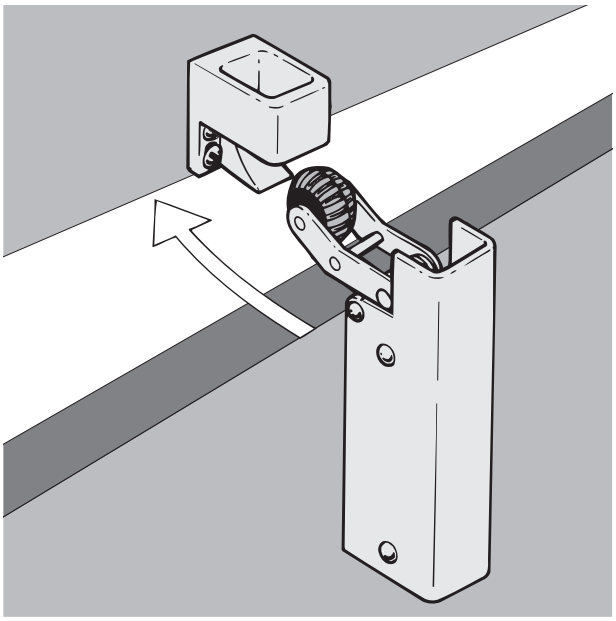

NOTE
The accessories require assembly.

Optional accessories
Hinged gates with angular frames

ELECTROMAGNET 70 KG WALL-MOUNTED WITH STRIKE PLATE

EM wall-mounted electromagnet with white plastic casing and unlock button. Anchor consisting of a nickel-plated plate and jointed baseboard.

Technical data	
power supply	24 Vcc
absorption	67 mA
minimum withstand force	approx. 71 kg

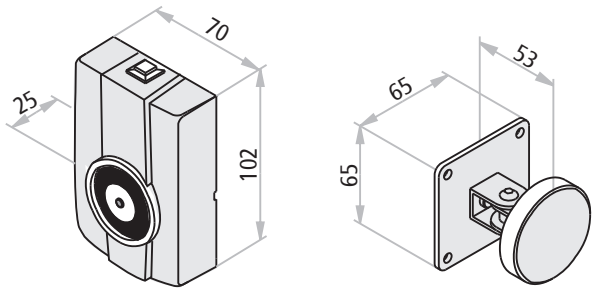

EC marked in conformity with STANDARD EN 1155

EXUS LP/LA/LX PANIC BARS

For more information, please see the "EXUS panic bars" section of the present brochure. Certification: suited for one-leaved gates and the active and secondary leaves of two-leaved gates with dimensions up to 1350 x 2880 mm/leaf and masses of 300 kg/leaf.
Height of central bar, 955 mm from finished floor surface.

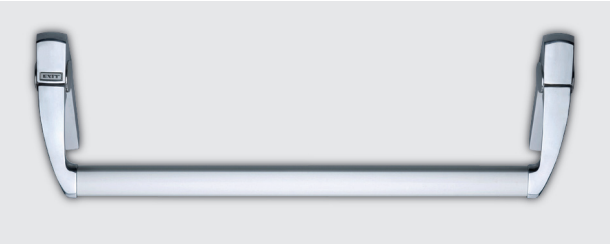

PEDESTRIAN DOOR

REI 120 two-leaved hinged gate with angular doorframes can be equipped with pedestrian doors with a lower threshold. The right or left opening direction should be chosen by the customer and indicated while ordering. The pedestrian door series is for insertion into the secondary leaf. It opens towards the hinge-side of the gate and can be equipped with a window, on request.
For additional information concerning the EXUS panic exit device, please see the dedicated pages in the panic exit device section of the present brochure.

Minimum dimensions (L2 and FM H) for the insertion of pedestrian doors:

Pedestrian door size	minimum dimensions
width 900	L2 > 1680
width 1140	L2 > 1980
height 2000	FMH > 2230

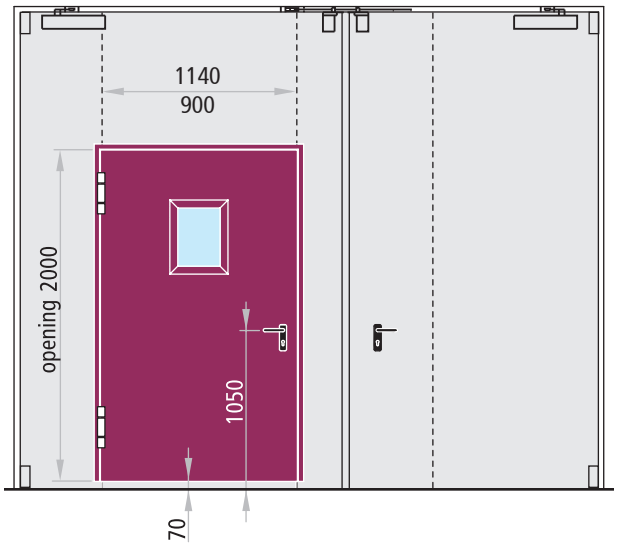

ATTENTION
The threshold makes pedestrian doors with panic bars unsuitable for escape routes.

Painting
Hinged gates with angular frames

Painting
The hinged gates series of gates is painted with thermoset powders, with anti-scratch finish and semi-glossy embossing (except for certain colors). The paint is especially resistant and offers a pleasant finish for interior applications. Choose from a wide range of RAL colors.

STANDARD TINTS WITH NO PRICE SUPPLEMENT

Interior painting with epoxy-polyester powders in turquoise pastel - light tone (NCS4020- B50G). The tonalities of the frame and the door leaf are represented in the photo to the side

Group 01:

color NCS 4020-B50G

SPECIAL TINTS WITH PRICE SUPPLEMENT

Interior paints (groups 02 and 03) available in a variety of RAL tints with epoxy-polyester powders.

Distinct from other RALs, metallic tinted paints RAL 9006, RAL 9007 (group 3) and RAL 9006 E (group 04) present a finish with a wrinkled structure that requires pre-approval of a sample.

Group 02:

RAL 1013	RAL 1015	RAL 5010	RAL 5024	RAL 6000	RAL 7016	RAL 7024	RAL 7035
RAL 7038	RAL 8011	RAL 9001	RAL 9002	RAL 9010	RAL 9011	RAL 9016	RAL 9018

Group 03:

RAL 1001	RAL 1003	RAL 3000	RAL 3003	RAL 3020	RAL 5012	RAL 5015	RAL 6005
RAL 7001	RAL 7004	RAL 7011	RAL 7030	RAL 7032	RAL 7037	RAL 7040	RAL 7042
RAL 7047	RAL 8017	RAL 8019	RAL 9005	RAL 9006*	RAL 9007*		

*requires pre-approval of a sample.

Painting
Hinged gates with angular frames

SPECIAL TINTS FOR EXTERIOR USE WITH PRICE SUPPLEMENTS

Exterior painting with polyester powders in various RAL tints.

Group 04:

RAL 1013E	RAL 3000E	RAL 5010E	RAL 6005E	RAL 7016E	RAL 7024E	RAL 7035E	RAL 9002E
RAL 9006E*	RAL 9010E	NCS 4020E	NCS 5020E				

*pre-approval of the sample is required.

SPECIAL TINTS BY REQUEST WITH PRICE SUPPLEMENTS

Painting available for interior and exterior with epoxy-polyester and polyester (respectively) powders in the requested RAL tints. Group 05 does not include special colors, such as metallic, mica, smooth or wrinkled texture and other sample tints like Pantone, NCS, etc.

Group 05:

Colors by request only

NOTE

Due to artifacts of the printing process, the colors depicted here may not correspond exactly to the colors of actual doors. Please see the RAL or NCS samples.

Cleaning

Water and neutral soap are recommended for the regular cleaning of our products. Do not use common cleaning products (see detergents) and/or other solvents. We shall not be held responsible for any problems that arise if these guidelines are not respected.

Retouching

On request, Ninz also provides touch-up paint (nitro/synthetic) in 1,00 kg cans in the necessary RAL tint.

Riverniciatura

In caso di riverniciatura procedere come segue:

- carteggiare e spolverare accuratamente le superfici
- applicare una mano di fondo epossidico opaco a 2 componenti, proponiamo il prodotto EPOX nr. 5203 colore beige 0059 della ditta ALCEA di Milano.
- riverniciare le superfici con smalti o pittura a propria scelta.

Protezione

Le porte sono previste per un normale impiego interno, per questo motivo devono essere protette dagli agenti atmosferici e dai raggi solari diretti.
Nei casi di applicazione all'esterno, si dovranno utilizzare vernici particolari adatte a questo tipo di impiego (vedi fascia 04, 05).

WARNING!

External installation of gates require various measures for preventing product degradation, such as:
1. The gates should always be protected from bad weather. Permanent damage may result if water seeps inside the door leaf. Provide canopies or roofing to protect newly installed and existing products.

2. Avoid darker colors for gates which will be exposed to direct sunlight. Sheet metal can heat up and cause warping of the door leaf which could compromise the functionality of the door itself. Gates with a height of FM H > 4500 mm are only available with anti-rust finish in the light tone turquoise pastel color.

GENERAL NOTES
All rights reserved.
No reproduction (partial or total) without prior authorization by Ninz.
Ninz reserves the right to modify the product.
Installation should be executed by qualified technicians.
Modifications may only be made as indicated in the installation instructions.
Original NINZ replacement parts must be used for all repair work.

Door-holding systems
For fire doors and gates

C2 MONO-ZONE MICROPROCESSOR

Certified in accordance with EN 1154-2 and EN 1154-4 standards.
The processor was designed and built in conformity with UNI EN 1154 standards, which regulate processors for fire alarms and related accessories which each must conform with EN1154 standards.

Technical data

model	52002
primary power supply	230 V AC, 100 mA, 50-60Hz
auxiliary power supply	2 batteries, 12 V DC/1,1 ÷ 1,3 Ah
minimum output current	264 mA
maximum output current	424 mA
buffer battery charger output	24 V DC (27.6 V DC)
protection rating	IP30
operational temperature	-5°C ÷ +40°C
operational zones	single zone (mono-zone)
acoustic alarm	internal buzzer
"low battery" signal	intermittent internal buzzer
EC certification	0051-CPD-0264
conformity with standards	EN 1154-2 +A1:2006 EN 1154-4:1997 + A1:2002 + A1:2006

ATTENTION
According to standard EN 1154-4, it is obligatory for the mono-zone processor to be equipped with:
- Nr. 1 heat/smoke detector RFC certif. EN 1154-7
- Nr. 1 pair of buffer batteries
- Nr. 1 external electronic siren certif. EN 1154-3
- Nr. 1 alarm activation button certif. EN 1154/11

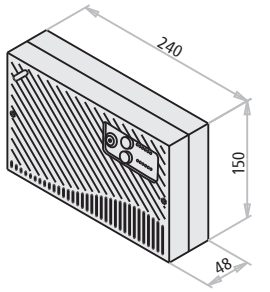

This is a control unit which administers the door-holding electromagnets for fire doors, where standards require consideration of every possible and imponderable event that could happen during normal functioning. The following, therefore, are subject to constant monitoring: all exits towards the smoke and heat detectors, the alarm and reset buttons, the external siren and the charge of the two batteries. The microprocessor itself, which functions as the brain of the system, is constantly monitored at regular intervals by a specific system routine that checks for proper functioning of the operational software. Any hitches, breakdowns or malfunctions are signaled by one of the ten LED diodes on the front panel, and the internal buzzer provides an additional acoustic signal for specific cases. Alarm or breakdown situations can then be reset at three different levels depending on the seriousness of the event: by a button located near the microprocessor, by a first button on the front of the microprocessor unit and by a second button on the same panel that requires key selector activation (key in possession of the safety manager). A fourth reset level is then supplied for the circuit only (operation executable by authorized technical personnel only).

MANAGES
- max. Nr. 5 RFC heat/smoke detectors
- max. Nr. 5 alarm activation buttons
- max. Nr. 2 electronic sirens
- Nr. 4 EM or EMP electromagnets
- Nr. 2 buffer batteries

RFC HEAT AND SMOKE DETECTOR

Certified in accordance with UNI EN 1154-5 and EN 1154-7 standards.
RFC heat and smoke detector characterized by white ABS casing. Optical/thermic operation with intervention temperature to be set between 54 and 65°C. To ensure proper functioning, the detectors must be subjected to regular 6-month maintenance checks. Please note that it is inadvisable to position the sensor where strong air currents are present.

Technical data

operational voltage	10 ÷ 30 V DC, typically 24 V DC
consumption at rest, at 24 V DC	70 µA
absorption of alarm at 24 V DC	50 mA

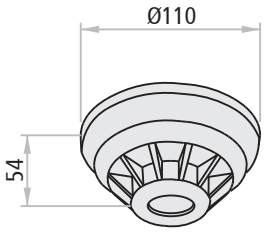

Technical data

operational temperature	-40°C ÷ +60°C
conformity with	EN 1154-5, EN 1154-7 standards

BUFFER BATTERIES

Pair of rechargeable buffer batteries, 12 V DC/1.2 Ah

NOTE
All DOOR-HOLDING SYSTEMS are supplied in separate packaging and require on-site assembly.

ELECTRONIC SIREN

Includes a volume control function for installation in internal and external environments. The connection is made using double clamps (6) for branching.

Technical data

power supply	9 ÷ 28 V DC
absorption by alarm at 12 V DC	8 mA
absorption by alarm at 24 V DC	16 mA
protection rating	IP65
operational temperature	-25°C ÷ +70°C
conformity with standard	EN 1154-3

With 28 or 32 selectable tones and a second tone for two-phase alarms.

Dimensions:
Ø 91 x 91mm.

ALARM ACTIVATION BUTTON

Pressure on the plastic front plate activates the electrical contact. Re-arming of the contact is executed manually using a key (provided).

Technical data

power supply	max. 30 V DC
protection rating	IP41
operational temperature	max. +65°C
internal exchange contact	n.o./n.c.
conformity with standard	EN 1154-11

In red color ABS with a weight of 110 gr.

Dimensions:
99 x 95 x 43mm.

EM ELECTROMAGNET

EM wall electromagnet with white plastic casing, complete with unlock button. Anchor consisting of a nickel-plated plate and a jointed baseboard.

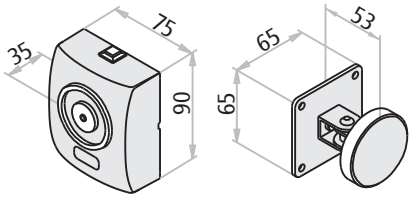

Technical data

power supply	24 V DC
absorption	60 mA
minimum withstand force	55 Kg.
EC certification	0407-CPD-011 (IG-098-2004) /02
conformity with standard	EN 1155

EMP ELECTROMAGNET

EMP floor electromagnets, consisting of a galvanized metal core with an unlock button and a fastener plate. Anchor consisting of a nickel-plated plate and jointed baseboard.

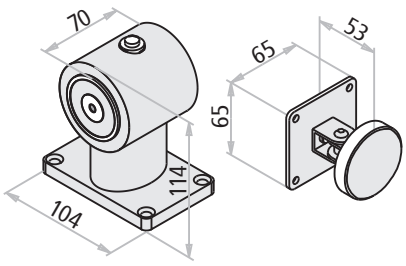

Technical data

power supply	24 V DC
absorption	60 mA
minimum withstand force	55 Kg.
EC certification	0407-CPD-011 (IG-098-2004)
conformity with standard	EN 1155

NOTE
All DOOR-HOLDING SYSTEMS are supplied in separate packaging and require on-site assembly.

EXUS®

Presentation
EXUS® panic bars

PRESENTATION

EXUS® panic bars

Ninz S.p.A. is a leader in fire doors, and has once again reasserted itself as a visionary company with a strong identity created by its continuous research into the design and technology of its own products, such as the new line of EXUS® panic bars.
The EXUS® panic bars are CE marked and according to European standard EN 1125:2008, which entered in effect January 01, 2010, and which prescribes a serious of substantial changes that further extend the requirements for maximum safety and ease of opening.

The KIT designed for your needs

When ordered separately from the door, the **EXUS®** series of panic bars is provided in elegant and functional KITs packaged for presentation in the most appropriate format for distribution.
Packaging in KITs ensures customers, installers and therefore the final users that they are receiving a complete anti-panic system with fully corresponding parts which are all CE certified.

Finishing

Attention to detail and proportions are highlighted by select materials and finishing.
In addition to the **black NYLON** version combined with **anodized ALUMINUM** bars, new combinations include the all **satinized STAINLESS STEEL** version and the **polished chromed ALUMINUM** version combined with the **anodized ALUMINUM bar**. Many other color and surface combinations are possible for equally aesthetic solutions.
The particular aesthetics of soft forms is one of the exclusive advantages of **EXUS® panic bars**, representing the fruit of designs generated in collaboration with Studio MM Design, which has been working with the company for many years.

Certifications and replacements

Given the importance of maintaining the entire system's CE conformity, special attention has been paid to replacement parts, which have been subjected to testing in accordance with the EN 1125:2008 standard due to their pivotal role in maintaining CE certification.
The only way to ensure that the products maintain their original characteristics over time is by using **original NINZ replacement parts**.
For this reason, the instructions for **EXUS® panic bars** include additional indications regarding proper installation and maintenance plus a exploded assembly drawing that specifies every smallest detail of the certified system with all of the references required for ordering replacement parts.

With the new EXUS® panic bar, NINZ S.p.A. demonstrates its willingness to believe in market development by investing in designs and company image in order to endow its own products with added value while maintaining highly competitive quality-price ratios.

Black NYLON handle

ALUMINUM handle with STAINLESS STEEL lever handle and chromed ALUMINUM backplate

Satinized STAINLESS STEEL handle

NOTE
By default external door furniture is provided with the same finishing as the panic bar.

EXUS® - Features, certifications
Panic bar

FEATURES

- Newly designed product with state of the art technological concept
- Available several in color and surface combinations: satinized stainless steel for the lever arms and the bar, or aluminum with polished chrome lever arms and anodized aluminum bar, and finally the classic evergreen combination - black nylon lever arms with anodized aluminum bar
- Certified for internal lock with 40 or 65 mm entrances for single leaves or active leaves, with 30 or 80 mm entrance for secondary leaves and with square spindle rotation of up to 45°
- Possibility of locking by key on the bar side as well
- Reversible for Right or Left mounting
- Protrusion 125 mm
- Proposed together with the door or separately in a complete KIT packaged in a black/yellow box
- Label applied to the packaging to identify the product's characteristics
- Wide range of customizations: colored bar, colored or stainless steel handles, lock with access control mechanisms, special coded or mastered cylinders

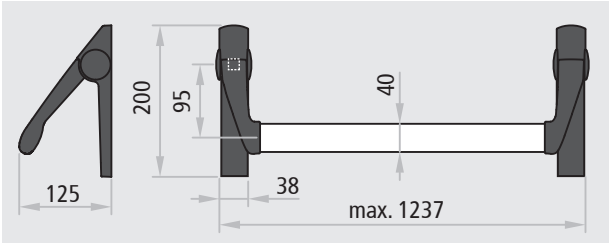

EXUS® is a registered trademark owned by Ninz S.p.A.

Also suited for doors with fire ratings:

EI$_2$120 REI 120 smoke resistant

CERTIFICATION

Suited for one-leaved doors or the active and secondary leaves of two-leaved doors with dimensions up to 1350 x 2880 mm/leaf, masses of 300 kg/leaf

CE

Denomination	EXUS PANIC BAR
Manufacturer	Ninz S.p.A. Corso Trento, 2/A I-38061 ALA (TN)/ITALY
Year application trademark	08
Nr. and year of the standard	EN 1125:2008
Certifying body	0425
CE certificate Nr.	1228-CPD-2007
Classification	**3 7 7 B 1 3 2 1 A A**

1st Category of use very frequent
2nd Durability 200.000 cycles
3rd Door mass over 200 kg
4th Suitable for fire/smoke rated doors
5th Safety, suitable for evacuation routes
6th High corrosion resistance 96 h
7th Material safety 1000 N
8th Bar protrusion up to 150 mm
9th Activation type with push bar
10th Suited for one- or two-leaved doors

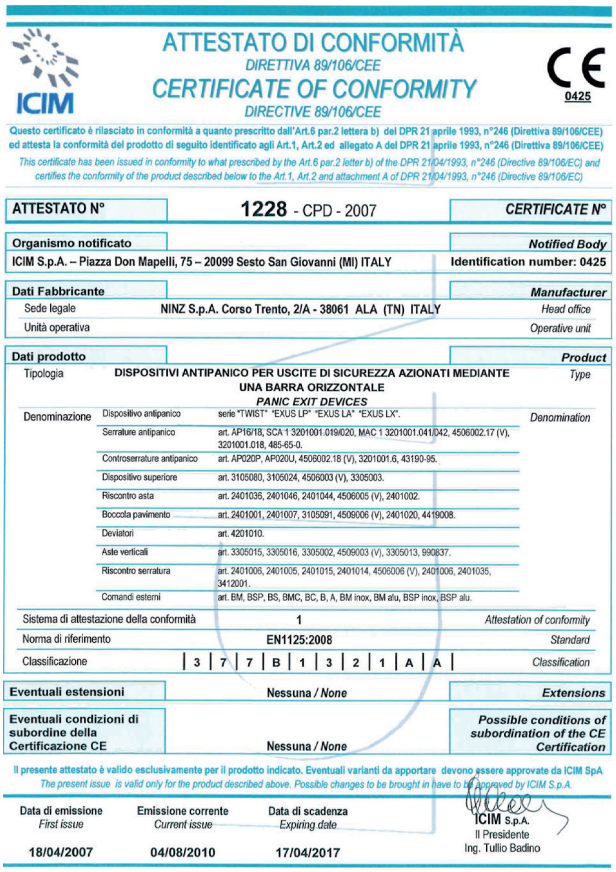

ICIM

ATTESTATO DI CONFORMITÀ
DIRETTIVA 89/106/CEE
CERTIFICATE OF CONFORMITY
DIRECTIVE 89/106/CEE

CE 0425

Questo certificato è rilasciato in conformità a quanto prescritto dall'Art.6 par.2 lettera b) del DPR 21 aprile 1993, n°246 (Direttiva 89/106/CEE) ed attesta la conformità del prodotto di seguito identificato agli Art.1, Art.2 ed allegato A del DPR 21 aprile 1993, n°246 (Direttiva 89/106/CEE)

This certificate has been issued in conformity to what prescribed by the Art.6 par.2 letter b) of the DPR 21/04/1993, n°246 (Directive 89/106/EC) and certifies the conformity of the product described below to the Art.1, Art.2 and attachment A of DPR 21/04/1993, n°246 (Directive 89/106/EC)

ATTESTATO N°	1228 - CPD - 2007	CERTIFICATE N°
Organismo notificato		Notified Body
ICIM S.p.A. – Piazza Don Mapelli, 75 – 20099 Sesto San Giovanni (MI) ITALY		Identification number: 0425
Dati Fabbricante		Manufacturer
Sede legale	NINZ S.p.A. Corso Trento, 2/A - 38061 ALA (TN) ITALY	Head office
Unità operativa		Operative unit
Dati prodotto		Product
Tipologia	DISPOSITIVI ANTIPANICO PER USCITE DI SICUREZZA AZIONATI MEDIANTE UNA BARRA ORIZZONTALE *PANIC EXIT DEVICES*	Type
Denominazione	Dispositivo antipanico: serie "TWIST" "EXUS LP" "EXUS LA" "EXUS LX".	Denomination
	Serrature antipanico: art. AP16/18, SCA 1 3201001.019/020, MAC 1 3201001.041/042, 4506002.17 (V), 3201001.018, 485-65-0.	
	Controserrature antipanico: art. AP020P, AP020U, 4506002.18 (V), 3201001.6, 43190-95.	
	Dispositivo superiore: art. 3105080, 3105024, 4506003 (V), 3305003.	
	Riscontro asta: art. 2401036, 2401046, 2401044, 4506005 (V), 2401002.	
	Boccola pavimento: art. 2401001, 2401007, 3105091, 4509006 (V), 2401020, 4419008.	
	Deviatori: art. 4201010.	
	Aste verticali: art. 3305015, 3305016, 3305002, 4509003 (V), 3305013, 990837.	
	Riscontro serratura: art. 2401006, 2401005, 2401015, 2401014, 4506006 (V), 2401006, 2401035, 3412001.	
	Comandi esterni: art. BM, BSP, BS, BMC, BC, B, A, BM inox, BM a/u, BSP inox, BSP alu.	
Sistema di attestazione della conformità	1	Attestation of conformity
Norma di riferimento	EN1125:2008	Standard
Classificazione	3 7 7 B 1 3 2 1 A A	Classification
Eventuali estensioni	Nessuna / *None*	Extensions
Eventuali condizioni di subordine della Certificazione CE	Nessuna / *None*	Possible conditions of subordination of the CE Certification

Il presente attestato è valido esclusivamente per il prodotto indicato. Eventuali varianti da apportare devono essere approvate da ICIM SpA
The present issue is valid only for the product described above. Possible changes to be brought in have to be approved by ICIM S.p.A.

Data di emissione *First issue*	Emissione corrente *Current issue*	Data di scadenza *Expiring date*
18/04/2007	04/08/2010	17/04/2017

ICIM S.p.A.
Il Presidente
Ing. Tullio Badino

EXUS® LP IN BLACK NYLON

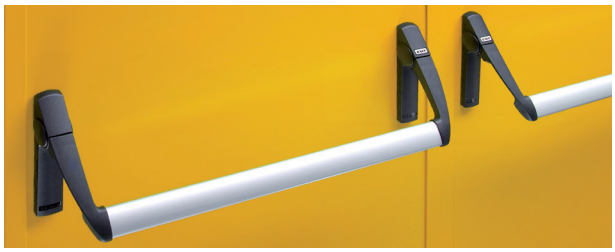

Description

The EXUS LP panic exit device consists of an anodized aluminum horizontal bar that inserts into the lever arms attached to the command mechanisms which activate the lock.

- Reversible for right or left opening
- For application to single leaf and two-leaved doors
- Suited for Rever/Univer/Proget doors and other types of panic exit doors
- The horizontal bar is made of extruded anodized aluminum with an elliptical cross-section measuring 40 x 20 mm and a length of 1150 mm
- Two black nylon lever arms with galvanized steel core
- The two command mechanisms are made of galvanized steel with black nylon cover plates, one of which has an EXIT label that identifies the lock side
- The lock is anti-panic/fire rated for Euro profile cylinders
- External door furniture and the backplate are made of black nylon, while the internal installation plate is made of galvanized steel
- DC version with double cylinder to pass

VERSIONS AVAILABLE

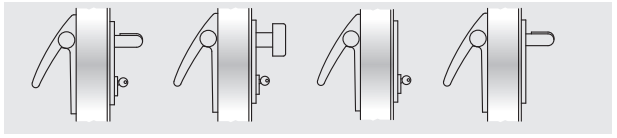

BM BSP BS BMC

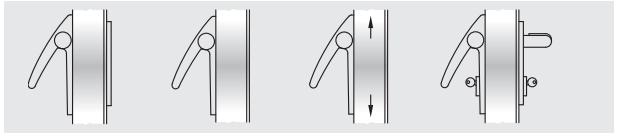

BC B A DC BM

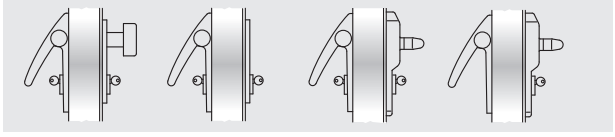

DC BSP DC BS DC ELM ELM

VARIATIONS ON REQUEST *(see dedicated page)*

- Aluminum bar painted in RAL colors
- External BM and BSP door furnitures in satinized stainless steel
- External BM and BSP door furnitures painted in RAL colors
- MAC1 panic lock with access control system, combinable with the BM and DC BM versions
- Mastered or coded cylinders
- Microswitch and cable sleeve for signaling when the door is open

EXUS LP (SUPPLIED WITH THE DOOR)

For single leaves or the active leaf (main leaf) of two-leaved doors:
Included (mounted on the door):
Included (in the package): Nr. 2 door command mechanisms, Nr. 2 black nylon carter covers, Nr. 2 black nylon lever arms, Nr. 1 anodized aluminum bar, Nr. 1 black nylon door furniture, Nr. 1 half-cylinder with 3 keys, Nr. 1 double cylinder with 3 keys (DC version only), Nr. 1 drilling template, Nr. 1 adhesive pictogram (green arrow), Nr. 1 set of installation/maintenance instructions
Versions available: BM, BSP, BS, BMC, BC, B (for Proget doors only), DC BM, DC BSP, DC BS, DC ELM, ELM.
ELM electric handle: see the dedicated pages

For the secondary leaf of two-leaved doors:
Included (mounted on the door): anti-panic safety lock with 80 mm entrance, the upper re-latch device, the upper strike plate and the vertical rods
Included (in the package): Nr. 2 command mechanisms, Nr. 2 black nylon carter covers, Nr. 2 black nylon lever arms, Nr. 1 anodized aluminum bar, Nr. 1 floor-mounted floor catch, Nr. 1 companion arm (for fire doors only), Nr. 1 drilling template, Nr. 1 adhesive pictogram (green arrow), Nr. 1 set of installation/maintenance instructions
Versions available: A

EXUS LP KIT (SUPPLIED SEPARATELY FROM THE DOOR)

KIT for single leaf or the active leaf of two-leaved doors:
Please specify leaf thickness and door type - REVER, UNIVER or PROGET - in the order
KIT contents: Nr. 1 anti-panic lock with 65 mm entrance, Nr. 1 strike plate insert, Nr. 2 command mechanisms, Nr. 2 black nylon carter covers, Nr. 2 black nylon lever arms, Nr. 1 anodized aluminum bar, Nr. 1 black nylon external door furniture, Nr. 1 half-cylinder with 3 keys, Nr. 1 double cylinder with 3 keys (DC version only), Nr. 1 drilling template, Nr. 1 adhesive pictogram (green arrow), Nr. 1 set of installation/maintenance instructions
Versions available: BM, BSP, BS, BMC, BC, DC BM, DC BSP, DC BS

KIT for the passive leaf of two-leaved doors, suited for REVER, UNIVER and PROGET fire and multipurpose doors (produced after 01.01.2005): specify door type on the order form
KIT contents: Nr. 1 anti-panic safety lock with 80 mm entrance, Nr. 2 command mechanisms, Nr. 2 black nylon carter covers, Nr. 2 black nylon lever arms, Nr. 1 anodized aluminum bar, Nr. 1 upper re-latch device, Nr. 1 floor-mounted floor catch, Nr. 1 companion arm (excluding REVER and UNIVER MULTIPURPOSE), Nr. 1 drilling template, Nr. 1 adhesive pictogram (green arrow), Nr. 1 set of installation/maintenance instructions
Versions available: A

KIT for the passive leaf of two-leaved doors and suited for other types of multipurpose doors:
KIT contents: Nr. 1 anti-panic safety lock with 80 mm entrance, Nr. 2 command mechanisms, Nr. 2 black nylon carter covers, Nr. 2 black nylon lever arms, Nr. 1 anodized aluminum bar, Nr. 1 upper re-latch device, Nr. 1 upper strike plate, Nr. 1 angular support bracket, Nr. 1 upper rod, Nr. 1 lower rod, Nr. 2 extension rods, Nr. 1 floor-mounted floor catch, Nr. 1 companion arm, Nr. 1 drilling template, Nr. 1 adhesive pictogram (green arrow), Nr. 1 set of installation/maintenance instructions
Versions available: A

EXUS® LA IN ALUMINUM

Description

The EXUS LA panic bar consists of an anodized aluminum horizontal bar that inserts into lever arms attached to the command mechanisms which activate the lock.

- Reversible for right or left opening
- For application to single leaf and two-leaved doors
- Suited for Rever/Univer/Proget doors and other types of panic exit doors
- The horizontal bar is made of extruded anodized aluminum with an elliptical cross-section measuring 40 x 20 mm and a length of 1150 mm
- The two lever arms are made of an aluminum alloy with a polished chrome finish
- The two command mechanisms are made of galvanized steel with aluminum alloy cover plates with a polished chrome finish, one of which has an EXIT label to identify the lock side
- The lock is anti-panic/fire rated for Euro profile cylinders
- The door furniture consist of the AISI 304 stainless steel handle or knob and the aluminum alloy backplate with polished chrome finish
- The arms, backplates and handle caps are finished with tri-valent chrome in compliance with the ROSH regulation
- DC version with double cylinder to pass

VERSIONS AVAILABLE

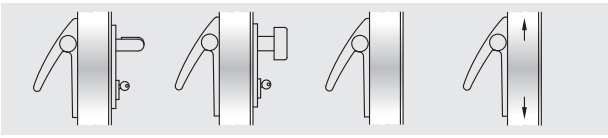

BM BSP B A

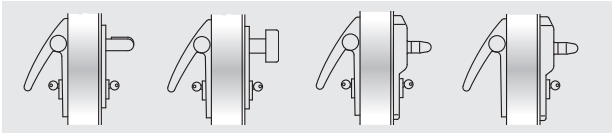

DC BM DC BSP DC ELM ELM

VARIATIONS ON REQUEST *(see dedicated page)*

- Aluminum bar painted in RAL colors
- MAC1 panic lock with access control system, combinable with the BM and DC BM versions
- Mastered or coded cylinders
- Microswitch and cable sleeve for signaling when the door is open

EXUS LA (SUPPLIED WITH THE DOOR)

For single leaves or the active leaf (main leaf) of two-leaved doors:
Included (mounted on the door): the anti-panic lock with 65 mm entrance and the backplate insert
Included (in the package): Nr. 2 command mechanisms, Nr. 2 polished chrome aluminum carter covers, Nr. 2 polished chrome aluminum lever arms, Nr. 1 anodized aluminum bar, Nr. 1 stainless steel/aluminum door furniture, Nr. 1 half-cylinder with 3 keys, Nr. 1 double cylinder with 3 keys (DC version only), Nr. 1 drilling template, Nr. 1 adhesive pictogram (green arrow), Nr. 1 set of instructions for installation/maintenance.
Versions available: BM, BSP, B (for Proget doors only), DC BM, DC BSP, DC ELM, ELM.
ELM electric handle: see the dedicated pages

For the secondary leaf of two-leaved doors:
Included (mounted on the door): anti-panic safety lock with 80 mm entrance, the upper re-latch device, the upper strike plate and the vertical rods
Included (in the package): Nr. 2 command mechanisms, Nr. 2 polished chrome aluminum carter covers, Nr. 2 polished chrome aluminum lever arms, Nr. 1 anodized aluminum bar, Nr. 1 floor-mounted floor catch, Nr. 1 companion arm (excluding REVER and UNIVER MULTIPURPOSE), Nr. 1 drilling template, Nr. 1 adhesive pictogram (green arrow), Nr. 1 set of installation/maintenance instructions
Versions available: A

EXUS LA KIT (SUPPLIED SEPARATELY FROM THE DOOR)

KIT for single leaf or the active leaf of two-leaved doors:
Please specify leaf thickness and door type - REVER, UNIVER or PROGET - in the order
KIT contents: Nr. 1 anti-panic lock with 65 mm entrance, Nr. 1 strike plate insert, Nr. 2 command mechanisms, Nr. 2 polished chrome aluminum carter covers, Nr. 2 polished chrome aluminum lever arms, Nr. 1 anodized aluminum bar, Nr. 1 stainless steel/aluminum external door furniture, Nr. 1 half-cylinder with 3 keys, Nr. 1 double cylinder with 3 keys (DC version only), Nr. 1 drilling template, Nr. 1 adhesive pictogram (green arrow), Nr. 1 set of installation/maintenance instructions
Versions available: BM, BSP, DC BM, DC BSP

KIT for the passive leaf of two-leaved doors, suited for REVER, UNIVER and PROGET fire and multipurpose doors (produced after 01.01.2005): specify door type on the order form
KIT contents: Nr. 1 anti-panic safety lock with 80 mm entrance, Nr. 2 command mechanisms, Nr. 2 polished chrome aluminum carter covers, Nr. 2 polished chrome aluminum lever arms, Nr. 1 anodized aluminum bar, Nr. 1 upper re-latch device, Nr. 1 floor-mounted floor catch, Nr. 1 companion arm (excluding REVER and UNIVER MULTIPURPOSE), Nr. 1 drilling template, Nr. 1 adhesive pictogram (green arrow), Nr. 1 set of installation/maintenance instructions
Versions available: A

KIT for the passive leaf of two-leaved doors and suited for other types of multipurpose doors:
KIT contents: Nr. 1 anti-panic safety lock with 80 mm entrance, Nr. 2 command mechanisms, Nr. 2 chromed aluminum carter covers, Nr. 2 chromed aluminum lever arms, Nr. 1 anodized aluminum bar, Nr. 1 upper re-latch device, Nr. 1 upper strike plate, Nr. 1 angular support bracket, Nr. 1 upper rod, Nr. 1 lower rod, Nr. 2 extension rods, Nr. 1 floor-mounted floor catch, Nr. 1 companion arm, Nr. 1 drilling template, Nr. 1 adhesive pictogram (green arrow), Nr. 1 set of installation/maintenance instructions
Versions available: A

EXUS® LX IN STAINLESS STEEL

Description

The entire EXUS LX panic bar is made of stainless steel, and consists of a horizontal bar that inserts into lever arms attached to the command mechanisms which activate the lock.

- Maximum corrosion resistance and noteworthy robustness of the entire set
- Optimal aesthetic appearance
- Reversible for right or left opening
- For application to single leaf and two-leaved doors
- Suited for Rever/Univer/Proget doors and other types of panic exit doors
- The horizontal bar is made of AISI 304 satinized stainless steel with an elliptical cross-section measuring 40 x 20 mm, length of 1150 mm
- The two lever arms are made of AISI 304 satinized stainless steel
- The two command mechanisms are made of AISI 304 stainless steel
- The two backplates and the cover caps are made of AISI 304 satinized stainless steel, and one is labeled with EXIT to identify the lock side
- The lock is anti-panic/fire rated for Euro profile cylinders
- The door furnitures and related backplate are made of AISI 304 satinized stainless steel, while the internal installation plate is made of galvanized steel
- DC version with double cylinder to pass

VERSIONS AVAILABLE

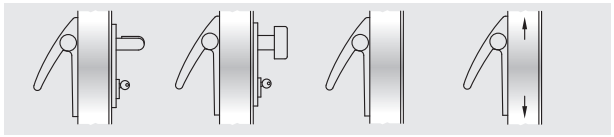

BM BSP B A

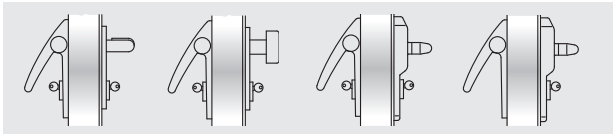

DC BM DC BSP DC ELM ELM

VARIATIONS ON REQUEST *(see dedicated page)*

- MAC1 panic lock with access control system, combinable with the BM and DC BM versions
- Mastered or coded cylinders
- Microswitch and cable sleeve for signaling when the door is open

EXUS LX (SUPPLIED WITH THE DOOR)

For single leaves or the active leaf (main leaf) of two-leaved doors:
Included (mounted on the door): the anti-panic lock with 65 mm entrance and the backplate insert
Included (in the package): Nr. 2 stainless steel command mechanisms, Nr. 2 stainless steel carter covers, Nr. 2 stainless steel lever arms, Nr. 1 stainless steel bar, Nr. 1 stainless steel door furniture, Nr. 1 half-cylinder with 3 keys, Nr. 1 double cylinder with 3 keys (DC version only), Nr. 1 drilling template, Nr. 1 adhesive pictogram (green arrow), Nr. 1 set of installation/maintenance instructions
Versions available: BM, BSP, B (for Proget doors only), DC BM, DC BSP, DC ELM, ELM.
ELM electric handle: see the dedicated pages

For the secondary leaf of two-leaved doors:
Included (mounted on the door): anti-panic safety lock with 80 mm entrance, the upper re-latch device, the upper strike plate and the vertical rods
Included (in the package): Nr. 2 stainless steel command mechanisms, Nr. 2 stainless steel carter covers, Nr. 2 stainless steel lever arms, Nr. 1 stainless steel bar, Nr. 1 floor-mounted floor catch, Nr. 1 companion arm (for fire doors only), Nr. 1 drilling template, Nr. 1 adhesive pictogram (green arrow), Nr. 1 set of installation/maintenance instructions
Versions available: A

EXUS LX KIT (SUPPLIED SEPARATELY FROM THE DOOR)

KIT for single leaf or the active leaf of two-leaved doors:
Please specify leaf thickness and door type - REVER, UNIVER or PROGET - in the order
KIT contents: Nr. 1 reversible anti-panic lock with 65 mm entrance, Nr. 1 strike plate insert, Nr. 2 stainless steel command mechanisms, Nr. 2 stainless steel carter covers, Nr. 2 stainless steel lever arms, Nr. 1 stainless steel bar, Nr. 1 stainless steel external door furniture, Nr. 1 half-cylinder with 3 keys, Nr. 1 double cylinder with 3 keys (DC version only), Nr. 1 drilling template, Nr. 1 adhesive pictogram (green arrow), Nr. 1 set of installation/maintenance instructions
Versions available: BM, BSP, DC BM, DC BSP

KIT for the passive leaf of two-leaved doors, suited for REVER, UNIVER and PROGET fire and multipurpose doors (produced after 01.01.2005): specify door type on the order form
KIT contents: Nr. 1 anti-panic safety lock with 80 mm entrance, Nr. 2 stainless steel command mechanisms, Nr. 2 stainless steel carter covers, Nr. 2 stainless steel lever arms, Nr. 1 stainless steel bar, Nr. 1 upper re-latch device, Nr. 1 floor-mounted floor catch, Nr. 1 companion arm (excluding REVER and UNIVER MULTIPURPOSE), Nr. 1 drilling template, Nr. 1 adhesive pictogram (green arrow), Nr. 1 set of installation/maintenance instructions
Versions available: A

KIT for the passive leaf of two-leaved doors and suited for other types of multipurpose doors:
KIT contents: Nr. 1 anti-panic safety lock with 80 mm entrance, Nr. 2 stainless steel command mechanisms, Nr. 2 stainless steel carter covers, Nr. 2 stainless steel lever arms, Nr. 1 stainless steel bar, Nr. 1 upper re-latch device, Nr. 1 upper strike plate, Nr. 1 angular support bracket, Nr. 1 upper rod, Nr. 1 lower rod, Nr. 2 extension rods, Nr. 1 floor-mounted floor catch, Nr. 1 companion arm, Nr. 1 drilling template, Nr. 1 adhesive pictogram (green arrow), Nr. 1 set of installation/maintenance instructions
Versions available: A

Notices
For panic exit device components

NOTICES

For panic exit devices, the human safety features are of fundamental importance in terms of their conformity with EN 1125:2008, which permits no modifications of any kind except for those described in the manufacturer's installation instructions.

All of NINZ's installation instructions for panic exit devices include a list of elements that have been tested and approved for use with panic exit devices and that can be packaged separately.

No modifications to the certified system are permitted, and every component must remain unchanged.

No uncertified components are applicable, and therefore the package contains certified components only.

Panic exit device components that are produced in conformity with European standards will provide a high level of human safety and an appropriate level of safety for material goods, as long as the doors and frames they are mounted on are in good condition.

Installation should only be carried out by qualified personnel and in strict conformity with the manufacturer's instructions.

After installation is complete, a dynamometer is used to measure the force required to release the lock by pressing on the horizontal bar and the measured forces are recorded in the maintenance register.

The instructions must be kept on file by the owner of the activity.

5002009/2 - C10
EDITION 01/2011
date of print: 01.12.2010

NINZ®
FIREDOORS

Ninz S.p.A. | Corso Trento 2/A | I-38061 Ala (TN)
Tel. +39 0464 678 300 | Fax +39 0464 679 025
info@ninz.it | www.ninz.it